M3 / 65-E

The M3/65-E is designed for use in industrial processes in environments with a potentially explosive atmosphere, caused by gas and dust, in compliance with ATEX Directive (94/9/CE).
In particular, the M3/65 can be used in areas 1 and 2 (gas) and in areas 21 and 22 (dusts) according to the layout and the following features:

Category: II 2 G,D

Level of protection: Ex e II, tD A21 IP66

Temperature class:
Gas: T4 (135°C)
Dusts: 120°C

EC certificate: LCIE 06 ATEX

Areas of use: 1, 2, 21, 22

Certifications

II 2 G, D – Class Ex e II T4/T3 tD A21 IP 66.
IEC/EN 60079-0, IEC/EN 60079-7,
IEC/EN 61241-0, IEC/EN 61241-1.
Certificate n° LCIE 06 ATEX

GGTN Permit and Gost-R certificate
for increased safety EEx e:
GOST R 51330.0-99, GOST R 51330.8-99,
GOST R IEC 61241-1-1-99.

Comply with the applicable
European Union directives

Technical features

Power supply
Three-phase voltage 127/220V, 50Hz, 200/346V, 60Hz; or 210/363V, 50 Hz suitable for use with an inverter from 20Hz to the base frequency with constant torque load profile.

Polarity
2 standard poles.

Conformity with European Directives
ATEX 94/9/CE; Electromagnetic compatibility 89/336/CE

Reference Regulations
IEC/EN 60079-0, IEC/EN 60079-7, IEC/EN 61241-0, IEC/EN 61241-1, EN 60034-1, EN 50081-1, EN 50081-2, EN 50082-1, EN 50082-2.

Controls
The components that affect protection are 100% accurately controlled and recorded. The vibrators undergo 100% dynamic tests on the bench.

Functioning
Continual service (S1) at maximum declared centrifugal force and electric power. Intermittent services are also possible depending on the type of vibrator and the operating conditions. For detailed information contact our technical assistance office.

Centrifugal force
Up to 88 kgf (863 N).

Mechanical protection
IP 66 according to IEC 529, EN 60529.

Shock-proof protection
IK 08 according to IEC 68, EN 50102.

Insulation class
Class F (155°C).

Tropicalization
Standard with vacuum impregnation.

Environmental temperature
From -10°C to +40°C, on request it is possible to have vibrators for max. environmental temperatures of 55°C.

Vibrator heat protection
On request with PTC thermistor rated heat detectors 130°C (DIN 44081-44082).

Fixing of the vibrator
In all positions and therefore without restriction. The terminal box is positioned underneath the vibrator, on the same side as the fixing base. Before fixing the vibrator it is therefore necessary to carry out the electric connection to the network power supply.

Bearing flange
Constructed in sintered steel. The geometry of the flange transmits the load to the casing uniformly.

Motor shaft
In treated steel alloy (Isothermic hardening) resistant to stress.

Eccentric weights
Thin plate-type, consent step-by-step control using the variation of the number of weights mounted.

Weight covers
In galvanised steel.

Other features
The M3/65-E is equipped with special cable-holders in compliance with ATEX Ex e II and is characterized by two copper plates.

For the M3/65-E, the user must fill the terminal box with silicone, after having performed the connection.

Lubrication
All vibrators are lubricated in the factory and do not require further lubrication if used in normal operating conditions.

Terminal box
The terminal box is positioned underneath the vibrator, on the same side as the fixing base. Special shaped terminals allow to fix the power supply cable, protecting it from loosening.

Electric motor
Three-phase or single-phase asynchronous type. Insulated windings using vacuum encapsulating. The rotor is die cast aluminium.

Casing
In high-tensile aluminium alloy, with sanded surface.

Fig. M1

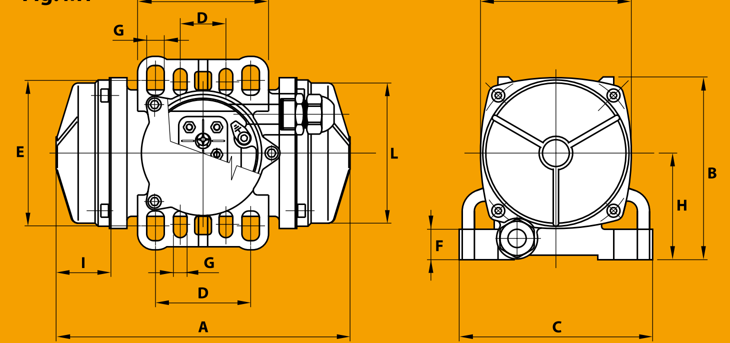

2 poles - 3000/3600 rpm

Description / Mechanical specifications

	Code	Type	SIZE	Static moment* kgmm 50 Hz	Static moment* kgmm 60 Hz	Centrifugal force kg 50 Hz	Centrifugal force kg 60 Hz	Centrifugal force kN 50 Hz	Centrifugal force kN 60 Hz	Weight kg 50 Hz	Weight kg 60 Hz
three-phase	6E0223	**M3/65-E** °	00	6.11	6.11	62.0	88.0	0.608	0.863	4.10	4.10

Electrical specifications

Type	Temp. class (G)	Temp. class (D)	Max input power W 50 Hz	Max input power W 60 Hz	Power rating W 50 Hz	Power rating W 60 Hz	Max. current A 400 V 50 Hz	Max. current A 460 V 60 Hz	t_E (s)		Ia/In
M3/65-E °	T4	120°C	105	105	80	80	0.26	0.23	20		3.48

Dimensional specifications (mm)

Type	Fig.	A	B	C	Multi-hole D	Multi-hole E	Holes øG	Holes N°	F	H	I	L	M	M	Cable entry thread
M3/65-E °	**M1**	193	120	127	30 60 65 62	85 100 85 106	9	4	20	70	36	96	86	99	M20x1,5

* Working moment = 2 x static moment. ° Available only in versions 127/220V 50Hz three-phase, 200/346V 60Hz three-phase and 210/363V 60Hz three-phase.

t_E (s) = set time t_E from IEC/EN 60079-7. t_{max} (s) = time limit for overloading protection intervention. Ia/In = ratio between start-up current and maximum current.